Installation and Operation Manual
X-TMF-5835-36-37-38-MFC-eng
Part Number: 541C011AAG
April, 2011

Brooks® Control Valves
Models 5836, 5836, 5837, 5838

Brooks
Control Valve
Model 5835

Brooks
Control Valve
Model 5836

Brooks® Control Valves

Essential Instructions
Read before proceeding!

Brooks Instrument designs, manufactures and tests its products to meet many national and international standards. These products must be properly installed, operated and maintained to ensure they continue to operate within their normal specifications. The following instructions must be adhered to and integrated into your safety program when installing, operating and maintaining Brooks Instrument products.

- To ensure proper performance, use qualified personnel to install, operate, update, program and maintain the product.
- Read all instructions prior to installing, operating and servicing the product. If this instruction manual is not the correct manual, please see back cover for local sales office contact information. Save this instruction manual for future reference.

⚠ WARNING: Do not operate this instrument in excess of the specifications listed in the Instruction and Operation Manual. Failure to heed this warning can result in serious personal injury and / or damage to the equipment.

- If you do not understand any of the instructions, contact your Brooks Instrument representative for clarification.
- Follow all warnings, cautions and instructions marked on and supplied with the product.
- Install your equipment as specified in the installation instructions of the appropriate instruction manual and per applicable local and national codes. Connect all products to the proper electrical and pressure sources.
- Operation: (1) Slowly initiate flow into the system. Open process valves slowly to avoid flow surges. (2) Check for leaks around the flow meter inlet and outlet connections. If no leaks are present, bring the system up to the operating pressure.
- Please make sure that the process line pressure is removed prior to service. When replacement parts are required, ensure that qualified people use replacement parts specified by Brooks Instrument. Unauthorized parts and procedures can affect the product's performance and place the safe operation of your process at risk. Look-alike substitutions may result in fire, electrical hazards or improper operation.
- Ensure that all equipment doors are closed and protective covers are in place to prevent electrical shock and personal injury, except when maintenance is being performed by qualified persons.

⚠ WARNING: For liquid flow devices, if the inlet and outlet valves adjacent to the devices are to be closed for any reason, the devices must be completely drained. Failure to do so may result in thermal expansion of the liquid that can rupture the device and may cause personal injury.

European Pressure Equipment Directive (PED)

All pressure equipment with an internal pressure greater than 0.5 bar (g) and a size larger than 25mm or 1" (inch) falls under the Pressure Equipment Directive (PED).

- The Specifications Section of this manual contains instructions related to the PED directive.
- Meters described in this manual are in compliance with EN directive 97/23/EC.
- All Brooks Instrument Flowmeters fall under fluid group 1.
- Meters larger than 25mm or 1" (inch) are in compliance with PED category I, II or III.
- Meters of 25mm or 1" (inch) or smaller are Sound Engineering Practice (SEP).

European Electromagnetic Compatibility (EMC)

The Brooks Instrument (electric/electronic) equipment bearing the CE mark has been successfully tested to the regulations of the Electro Magnetic Compatibility (2004/108/EC (EMC directive 89/336/EEC)).
Special attention however is required when selecting the signal cable to be used with CE marked equipment.

Quality of the signal cable, cable glands and connectors:

Brooks Instrument supplies high quality cable(s) which meets the specifications for CE certification.
If you provide your own signal cable you should use a cable which is overall completely screened with a 100% shield.
“D” or “Circular” type connectors used should be shielded with a metal shield. If applicable, metal cable glands must be used providing cable screen clamping.
The cable screen should be connected to the metal shell or gland and shielded at both ends over 360 Degrees.
The shield should be terminated to an earth ground.
Card Edge Connectors are standard non-metallic. The cables used must be screened with 100% shield to comply with CE certification.
The shield should be terminated to an earth ground.
For pin configuration : Please refer to the enclosed Instruction Manual.

ESD (Electrostatic Discharge)

⚠ CAUTION: This instrument contains electronic components that are susceptible to damage by static electricity. Proper handling procedures must be observed during the removal, installation or other handling of internal circuit boards or devices.

Handling Procedure:

1. Power to unit must be removed.
2. Personnel must be grounded, via a wrist strap or other safe, suitable means before any printed circuit card or other internal device is installed, removed or adjusted.
3. Printed circuit cards must be transported in a conductive container. Boards must not be removed from protective enclosure until immediately before installation. Removed boards must immediately be placed in protective container for transport, storage or return to factory.

Comments

This instrument is not unique in its content of ESD (electrostatic discharge) sensitive components. Most modern electronic designs contain components that utilize metal oxide technology (NMOS, SMOS, etc.). Experience has proven that even small amounts of static electricity can damage or destroy these devices. Damaged components, even though they appear to function properly, exhibit early failure.

Dear Customer,

We appreciate this opportunity to service your flow measurement and control requirements with a Brooks Instrument device. Every day, flow customers all over the world turn to Brooks products for solutions to their gas and liquid low-flow applications. Brooks provides an array of flow measurement and control products for various industries from biopharmaceuticals, oil and gas, fuel cell research and chemicals, to medical devices, analytical instrumentation, semiconductor manufacturing, and more.

The Brooks product you have just received is of the highest quality available, offering superior performance, reliability and value to the user. It is designed with the ever changing process conditions, accuracy requirements and hostile process environments in mind to provide you with a lifetime of dependable service.

We recommend that you read this manual in its entirety. Should you require any additional information concerning Brooks products and services, please contact your local Brooks Sales and Service Office listed on the back cover of this manual or visit www.BrooksInstrument.com

Yours sincerely,
Brooks Instrument

THIS PAGE WAS INTENTIONALLY LEFT BLANK

TABLE OF CONTENTS

Section 1 INTRODUCTION

1-1 GENERAL DESCRIPTION

The Brooks valve series 5835/36/37/38 are designed for an accurate flow control of gases. The valve are mostly used together with the Brooks Thermal Mass Flowmeters and the electronic control systems series 4250.

1-2 MODEL DESCRIPTION

Model 5835N Control valve with Kv values up to 0,022. Max. working pressure: 100 bar. Max. flowrate: 20 l_n/min N_2.

Model 5835P Control valve with Kv values up to 0,022. Max. working pressure: 300 bar. Max. flowrate: 20 l_n/min N_2.

Model 5836N Control valve with Kv values up to 0,22. Max. working pressure: 105 bar. Max. flowrate: 100 l_n/min N_2.

Model 5836X Ex-proof. Control valve for use in hazardous areas with Kv values up to 0,22. Max. working pressure: 105 bar. Max. flowrate: 100 l_n/min N_2.

Model 5837 Servo control valve with Kv values up to 2,5. Max. working pressure: 40 bar

Model 5838 Ex-proof. Control valve for use in hazardous areas with Kv values up to 0,022. Max working pressure: 300 bar. Max. flowrate: 20 l_n/min N_2.

1-3 SPECIFICATIONS

Material of Construction

Body, orifices and adaptors	316 Stainless Steel
Lower guide spring	316 Stainless Steel
Plunger	430 Stainless Steel
Valve seat	Viton, Teflon, Buna-N or Kalrez
Flow rangeability	50 to 1
Power requirements	• 5835N 24V 300 mA • 5835P 24V 500 mA • 5836N 24V 250 mA • 5836X 24V 500 mA • 5837 24Vac 50/60 Hz • 5838 24V 500 mA
Max. safe working pressure	• 5835N 100 bar • 5835P & 5838 300 bar • 5836 & 5836X 105 bar • 5837 40 bar (higher pressure ratings optional)
Explosion proof classification of 5838 and 5836X	EEx e II T5 CENELEC certificate Ex-83/2124X
Protection grade models 5836X, 5837, 5838	IP 65

1-4 STANDARD RANGES

K_V values and max. acceptable pressure drop over the valve.

Model 5835N/P and 5838		
Kv value (m³n/h)	Orifice diameter (inch)	Max. ΔP (bar)
0,000005	0,0013	100
0,00002	0,002	100
0,00005	0,003	100
0,00011	0,004	100
0,00022	0,005	100
0,00044	0,007	100
0,0011	0,010	45
0,0022	0,014	38
0,0044	0,020	22
0,011	0,028	16
0,022	0,032	12

Model 5836N and 5836X		
Kv value (m³n/h)	Orifice diameter (inch)	Max ΔP (bar)
0,022	0,032	12
0,044	0,046	6
0,11	0,062	4
0,18	0,093	2
0,22	0,120	1,5

Model 5837		
Kv value (m³n/h)		
0,001	0,016	0,25
0,00016	0,025	0,4
0,0025	0,04	0,63
0,004	0,063	1,0
0,0063	0,1	1,6
0,01	0,16	2,5

Section 2 INSTALLATION

2-1 RECEIPT OF EQUIPMENT

When the equipment is received, the outside packing case should be checked for damage incurred during shipment. If the packing case is damaged, the local carrier should be notified at once regarding his liability. A report should be submitted to the Product Service Department of Brooks Instrument B.V. Remove the envelope containing the packing list. Carefully remove the equipment from the packing case. Make sure spare parts are not discarded with the packing material. Inspect for damaged or missing parts.

2-2 RETURN SHIPMENT

Do not return any assembly or part without a Return Material Report. The Return Material Report is available from all District Sales Offices and the Product Service Department. Information describing the problem, corrective action, if any, and the work to be accomplished at the factory must be included.

2-3 RECOMMENDED STORAGE PRACTICE

If intermediate or long-term storage is required for equipment, as supplied by Brooks Instrument B.V., it is recommended that said equipment be stored in accordance with the following:

a. Within the original shipping container.

b. Store in a sheltered area, with the following conditions:
   1. Ambient temperature 21°C nominal, 32°C (90°F) maximum/7°C minimum.
   2. Relative humidity 45% nominal, 60% maximum/25% minimum.

c. Upon removal from storage, a visual inspection should be conducted to verify the condition of the equipment is 'as received'. If the equipment has been in storage for an excess of ten months, or in conditions in excess of the recommended, all pressure boundary seals should be replaced, the device should be subjected to a pneumatic pressure test in accordance with applicable vessel codes.

2-4 INSTALLATION

Mounting holes and screws are provided in the valve for installation. For dimensions see figures 2-1 to 2-6

2-5 GAS CONNECTIONS

Standard inlet and outlet connections supplied with the valve are 1/8'', 1/4'' Swagelok or NPT. Prior to installation make certain all piping is clean and free of obstruction.

2-6 ELECTRICAL INSTALLATION

A connector included mating connector is supplied on the valve. It is recommended to use the standard Brooks interconnecting cable which is complete with the mating connectors for the valve and the Control Electronics.

2-7 CONTROL VALVE SIZING

For proper sizing the following information is needed:

Upstream pressure	P1 in bar (abs)
Downstream pressure	P2 in bar (abs)
Gas temperature	T in Kelvin
Maximum flow	Q in m^3n/h
Gas density	ρ in kg/m^3n

Depending on the ratio between P1 and P2, we have to make different calculations.

- If $\frac{P2}{P1} > 0{,}5$ $K_V = \frac{Q\ max.}{514} \sqrt{\frac{\rho \times T}{(P1-P2) \times P2}}$
- If $\frac{P2}{P1} \leqslant 0{,}5$ $K_V = \frac{Q\ max.}{257 \times P1} \sqrt{\frac{\rho \times T}{(P1-P2) \times P2}}$

2-8 ELECTRONIC CONTROL SYSTEM

It is recommended to use a standard Brooks control system eg. series 4250 for controlling and powering the valve. This analog controller is designed for use with this type of control valve. The circuit compares the flow input signal with the reference setpoint signal. The difference between these inputs is then amplified to drive the control valve properly. This described analog controller is a p.c. board in the Brooks 4250 series modular electronics.

2-9 DIMENSIONAL DRAWINGS

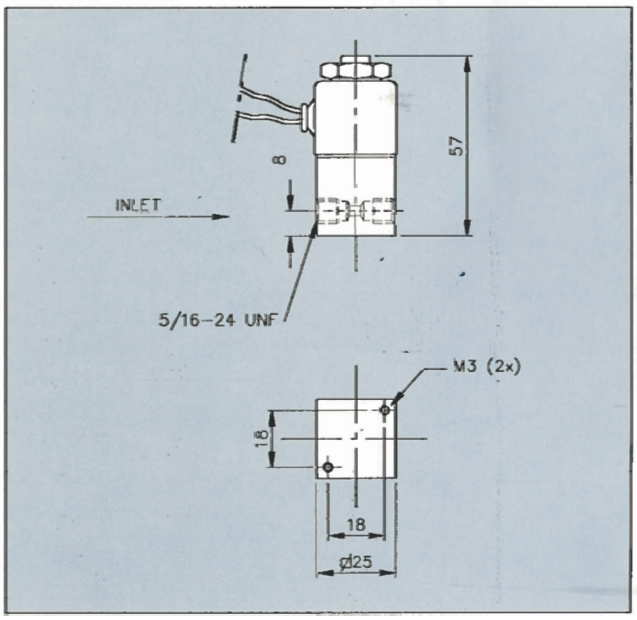

Figure 2-1 Model 5835N control valve

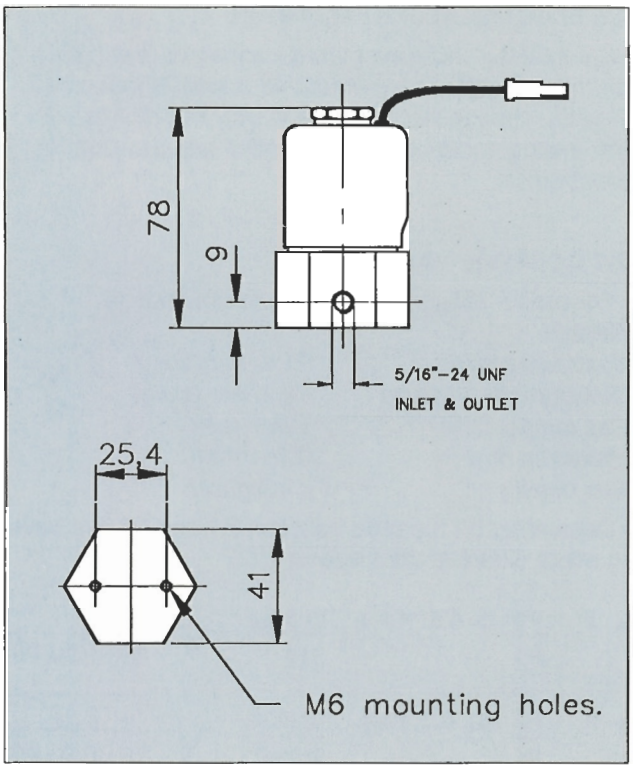

Figure 2-2 Model 5835P control valve high pressure

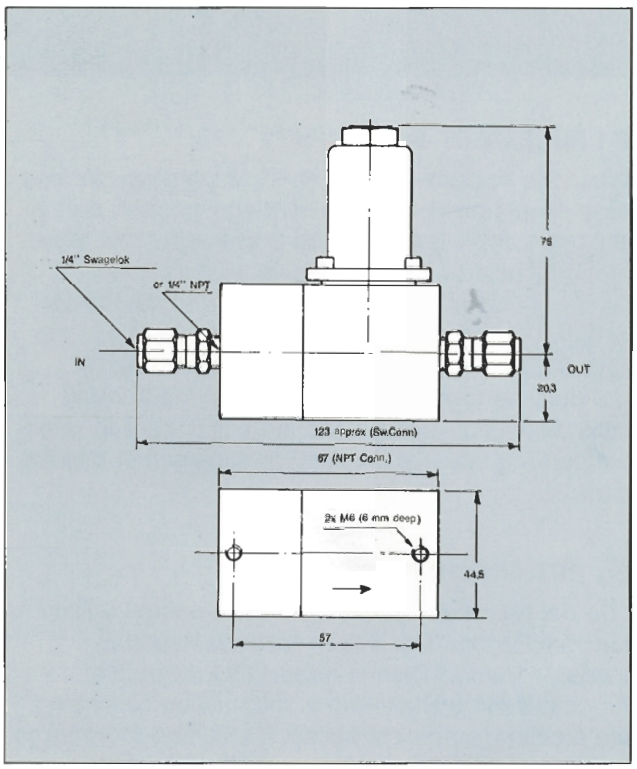

Figure 2-3 Model 5836N control valve

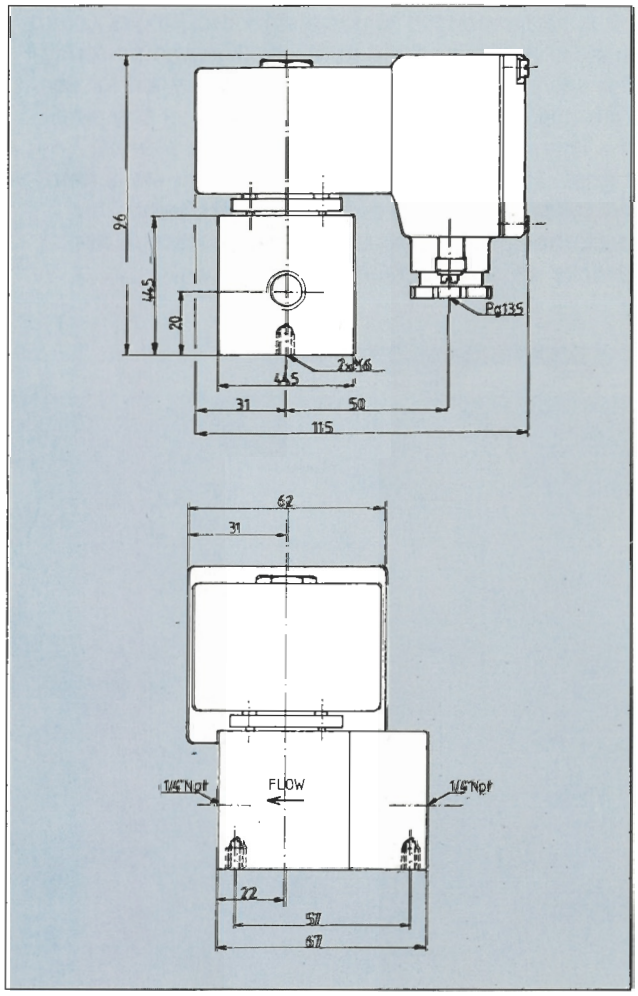

Figure 2-4 Model 5836X Ex-proof control valve

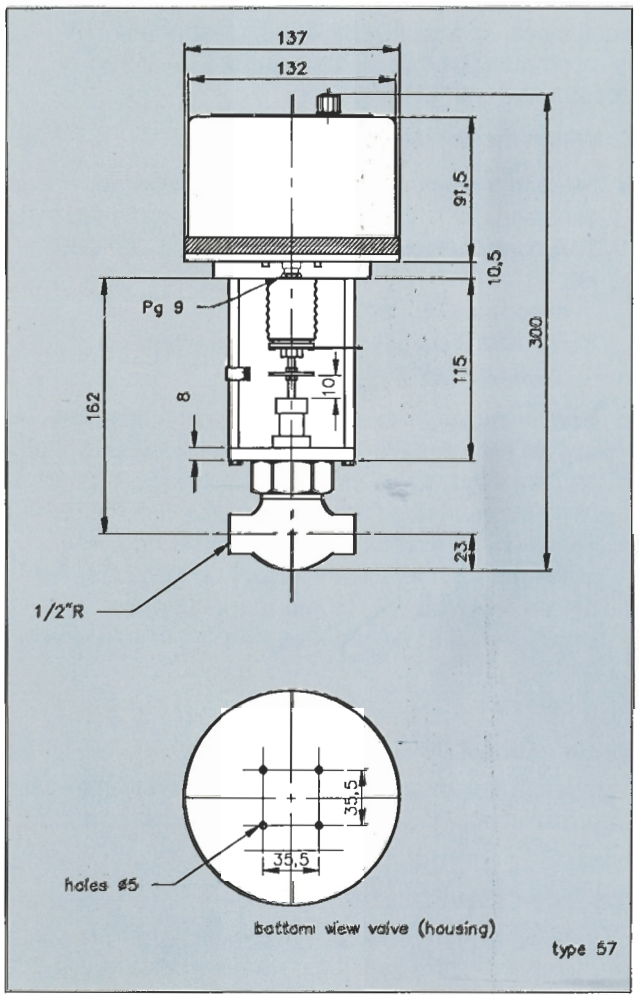

Figure 2-5 Model 5837 Servo control valve

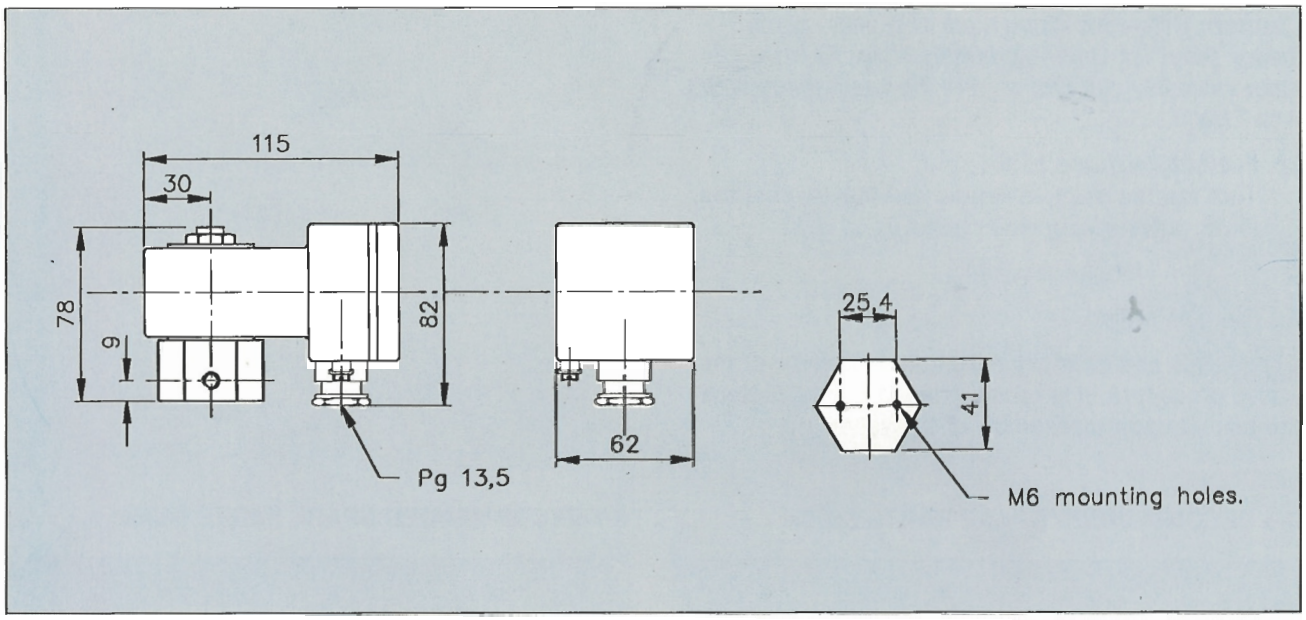

Figure 2-6 Model 5838 Ex-proof control valve high pressure

2-10 CONNECTION DIAGRAM MODEL 5837

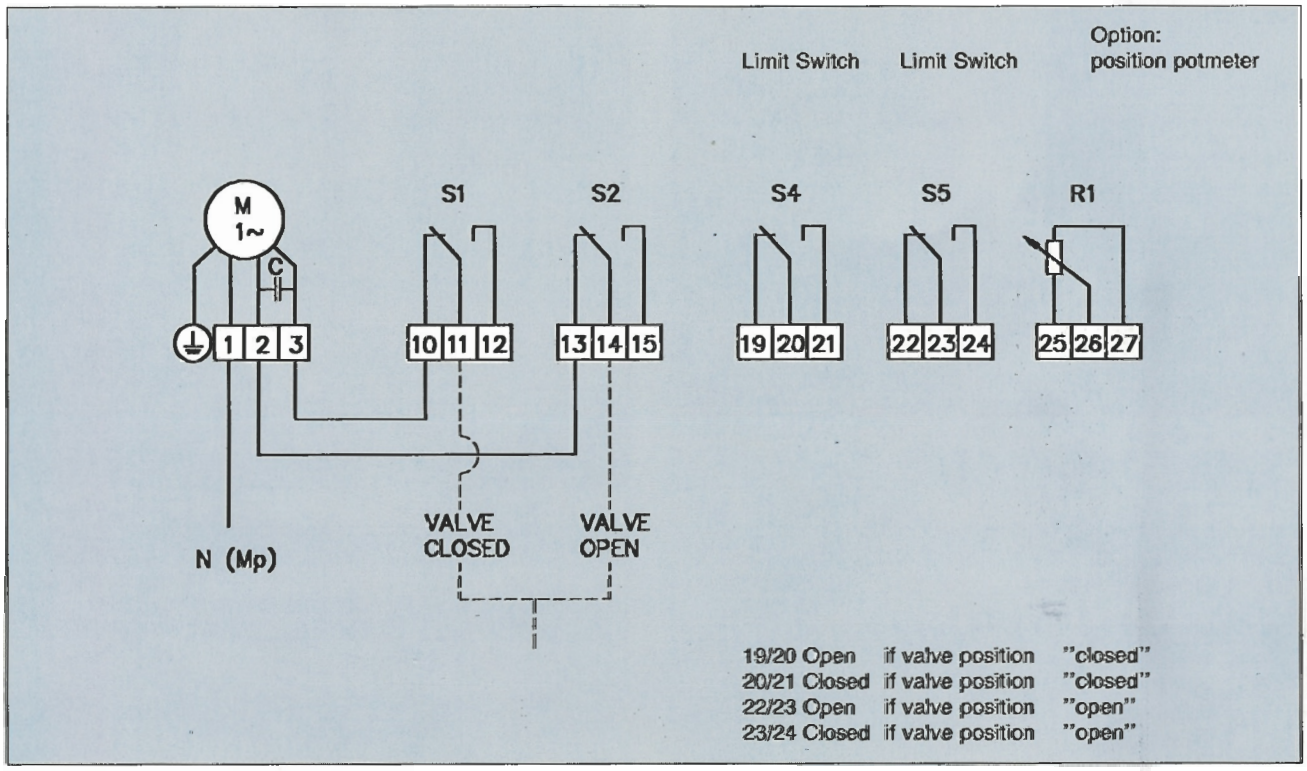

Section 3 MAINTENANCE

3-1 GENERAL MAINTENANCE

No routine maintenance is required for the control valve other than occasional cleaning. It is recommended to use Freon for cleaning the control valve. Flush in both directions and air dry thoroughly.

3-2 DISASSEMBLE AND ASSEMBLE PROCEDURE

1. Remove the jam nut on the top of the valve assembly.
2. Remove the coil valve.

3a. **For 5836N/X:**
Remove screws holding retaining plate. Remove retaining ring.

Caution: *Before removing stem assembly, gently loosen the stem assembly before lifting. Remove the stem assembly carefully so that the lower guide spring won't bend.*

3b. **For 5835N/P and 5838:**
Turn out the stem assembly carefully so that the lower guide spring won't bend.

4. Remove plunger assembly.

5. Remove orifice.

Clean parts and carefully assemble in reverse of the above procedure. It is recommended that all O-rings are placed upon reassembly of the valve.

3-3 RECOMMENDED SPARE PARTS 5835N

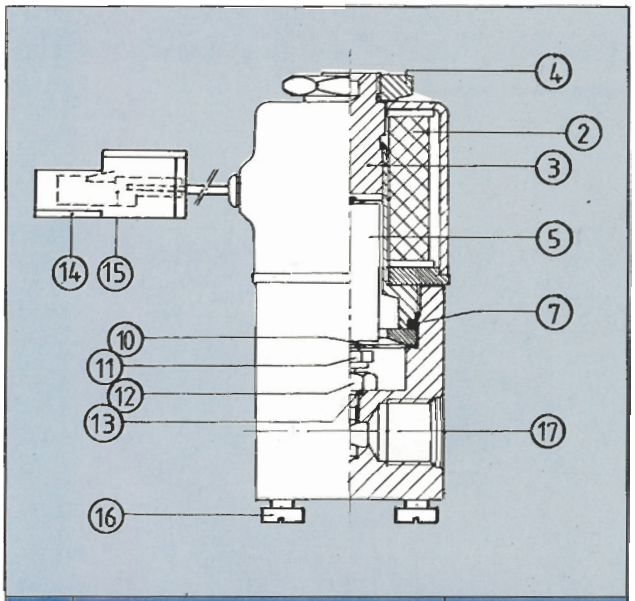

ITEM	DESCRIPTION	PARTNUMBER
2	Coil	185-Z-128-AAA
3	Sleeve, stainless steel material	839-Z-034-AAA
4	Nut, steel	575-Z-011-ACJ
5	Plunger assembly	622-Z-105-CEA
7	O-ring, Viton/Teflon	375-B-015-QTA/QMA
10	Spring	820-Z-052-BMA
11	Valve seat assy, Kalrez Valve seat assy, Teflon Valve seat assy, Kalrez	715-Z-046-AAA 715-Z-041-AAA 715-Z-162-AAA
12	Orifice	(see par. 2-6)
13	O-ring Viton/Teflon	375-G-042-QTA/QMA
14	Connector housing	207-F-002-BZZ
15	Connector pin	207-X-005-AZZ
16	Cyl. head screw M3 x 10	760-D-083-BMA
17	Available connections: 1/8'' Compression fittings 1/4'' Compression fittings 1/8'' NPT 1/4'' NPT	 014-G-022-BMA 014-G-089-BMA 014-C-008-BMA 014-C-018-BMA

3-4 RECOMMENDED SPARE PARTS 5835P

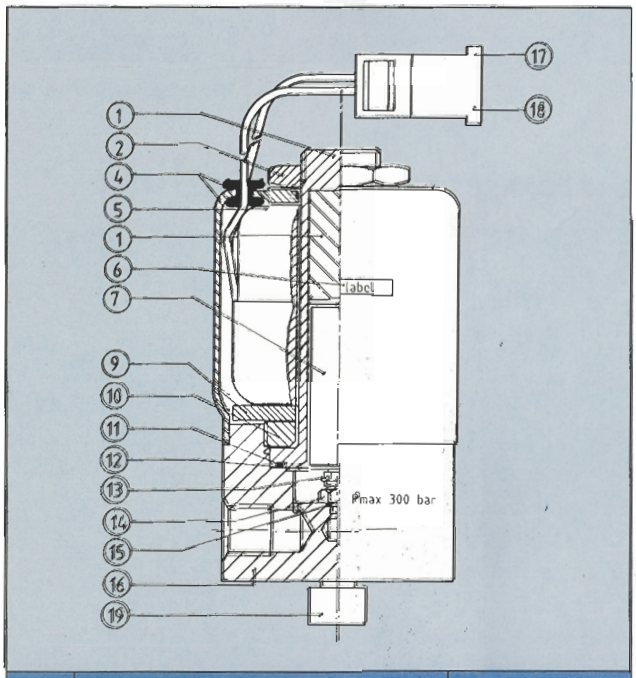

ITEM	DESCRIPTION	PARTNUMBER
1	Sleeve	839-Z-032-AAA
2	Nut, steel	575-Z-009-BES
5	Coil	185-Z-125-AAA
7	Plunger assembly	622-Z-093-CEA
11	O-ring, Viton/Teflon	375-B-018-QTA/QMA
12	Spring	820-Z-052-BMA
13	Valve seat assy, Viton	715-Z-046-AAA
14	Orifice	(see par. 2-6)
15	O-ring, Viton/Teflon	375-G-042-QTA/QMA
17	Connector housing	207-F-002-BZZ
18	Connector pin	207-X-005-AZZ
19	Cyl. head screw M6 x12	760-C-155-BMA
20.	Available connections: 1/8'' Compression fittings 1/4'' Compression fittings 1/8'' NPT 1/4'' NPT	 014-G-022-BMA 014-G-089-BMA 014-C-008-BMA 014-C-018-BMA

3-5 RECOMMENDED SPARE PARTS 5836N

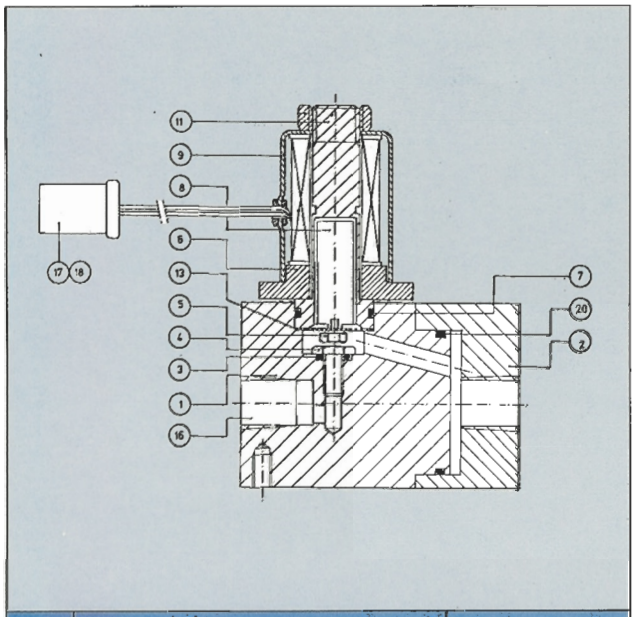

ITEM	DESCRIPTION	PARTNUMBER
3	O-ring, Viton/Teflon	375-B-008-QTA/QMA
4	Orifice	(see par. 2-6)
5	Valve seat assy, Viton Valve seat assy, Kalrez	715-Z-051-AAA 715-Z-163-AAA
7	O-ring Viton/Teflon	375-B-015-QTA/QMA
8*	Plunger assembly	622-Z-165-AAA
9	Coil	185-Z-087-AAA
11*	Stem assembly	949-Z-203-QOA
13	Spring	820-Z-083-BMA
14	Cyl. mounting screws, M6 x 12	760-C-155-BMA
15	Cap screws 4-40 x 5/16	759-C-161-NCK
16	Connection 1/4'' Compression fittings	014-Z-352-BMA

* Should be ordered as an assembly!

3-7 RECOMMENDED SPARE PARTS LIST 5838

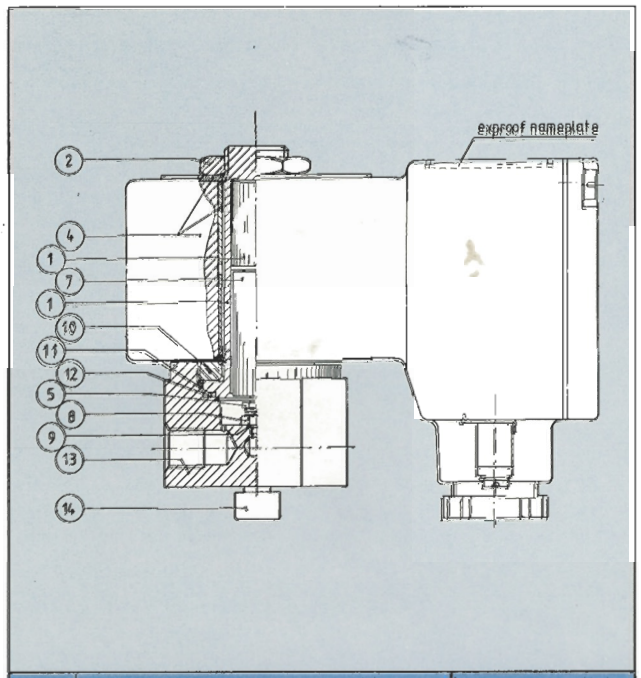

ITEM	DESCRIPTION	PARTNUMBER
1	Sleeve, sub assy	839-Z-032-AAA
2	Nut, steel	575-Z-009-BES
4	Ex-proof coil	185-Z-126-AAA
5	Valve seat assy, Viton Valve seat assy, Kalrez	715-Z-046-AAA 715-Z-162-AAA
7	Plunger assy, 430 SS	622-Z-093-CEA
8	Orifice	(see par. 2-6)
9	O-ring, Viton/Teflon	375-G-042-QTA/QMA
11	O-ring, Viton/Teflon	375-B-018-QTA/QMA
12	Spring, 316 SS	820-Z-052-BMA
14	Cyl. head screw M6 x 12, stn. stl.	760-C-155-BMA

3-6 RECOMMENDED SPARE PARTS 5836X

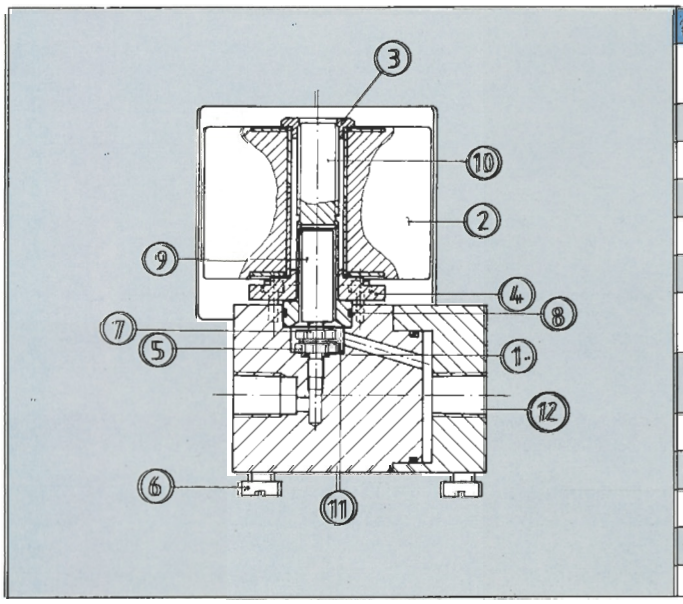

ITEM	DESCRIPTION	PARTNUMBER
1	O-ring, Viton/Teflon	375-B-008-QTA/QMA
2	Ex-proof coil	185-Z-126-AAA
3	Modified nut	575-Z-018-ACK
4	Modified retainer plate	715-Z-103-ACD
5	Orifice	(see par. 2-6)
6	Cyl. screws	760-C-161-NCK
7	Valve seat assy, Viton Valve seat assy, Kalrez	715-Z-051-AAA 715-Z-163-AAA
8	O-ring Viton/Teflon	375-B-015-QTA/QMA
9*	Plunger assembly	622-Z-165-AAA
10*	Stem assembly	949-Z-203-QOA
11	Spring	820-Z-083-BMA
12	Connection 1/4" Compression fittings	014-Z-352-BMA

* Should be ordered as an assembly!

NOTES:

LIMITED WARRANTY

Seller warrants that the Goods manufactured by Seller will be free from defects in materials or workmanship under normal use and service and that the Software will execute the programming instructions provided by Seller until the expiration of the earlier of twelve (12) months from the date of initial installation or eighteen (18) months from the date of shipment by Seller. Products purchased by Seller from a third party for resale to Buyer ("Resale Products") shall carry only the warranty extended by the original manufacturer.
All replacements or repairs necessitated by inadequate preventive maintenance, or by normal wear and usage, or by fault of Buyer, or by unsuitable power sources or by attack or deterioration under unsuitable environmental conditions, or by abuse, accident, alteration, misuse, improper installation, modification, repair, storage or handling, or any other cause not the fault of Seller are not covered by this limited warranty, and shall be at Buyer's expense.
Goods repaired and parts replaced during the warranty period shall be in warranty for the remainder of the original warranty period or ninety (90) days, whichever is longer. This limited warranty is the only warranty made by Seller and can be amended only in a writing signed by an authorized representative of Seller.

BROOKS SERVICE AND SUPPORT

Brooks is committed to assuring all of our customers receive the ideal flow solution for their application, along with outstanding service and support to back it up. We operate first class repair facilities located around the world to provide rapid response and support. Each location utilizes primary standard calibration equipment to ensure accuracy and reliability for repairs and recalibration and is certified by our local Weights and Measures Authorities and traceable to the relevant International Standards.

Visit www.BrooksInstrument.com to locate the service location nearest to you.

START-UP SERVICE AND IN-SITU CALIBRATION

Brooks Instrument can provide start-up service prior to operation when required.
For some process applications, where ISO-9001 Quality Certification is important, it is mandatory to verify and/or (re)calibrate the products periodically. In many cases this service can be provided under in-situ conditions, and the results will be traceable to the relevant international quality standards.

CUSTOMER SEMINARS AND TRAINING

Brooks Instrument can provide customer seminars and dedicated training to engineers, end users and maintenance persons.

Please contact your nearest sales representative for more details.

HELP DESK

In case you need technical assistance:

Americas	☎ 1 888 554 FLOW
Europe	☎ +31 (0) 318 549 290
Asia	☎ +81 (0) 3 5633 7100

Due to Brooks Instrument's commitment to continuous improvement of our products, all specifications are subject to change without notice.

ISO 9001 QUALITY SYSTEM

Brooks Instrument
407 West Vine Street
P.O. Box 903
Hatfield, PA 19440-0903 USA
T (215) 362 3700
F (215) 362 3745
E-Mail BrooksAm@BrooksInstrument.com
www.BrooksInstrument.com

Brooks Instrument
Neonstraat 3
6718 WX Ede, Netherlands
T +31 (0) 318 549 300
F +31 (0) 318 549 309
E-Mail BrooksEu@BrooksInstrument.com

Brooks Instrument
1-4-4 Kitasuna Koto-Ku
Tokyo, 136-0073 Japan
T +81 (0) 3 5633 7100
F +81 (0) 3 5633 7101
E-Mail BrooksAs@BrooksInstrument.com

BROOKS® INSTRUMENT